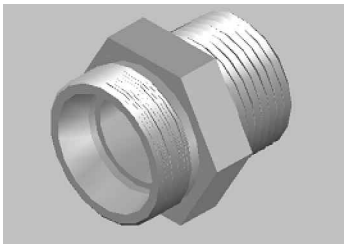

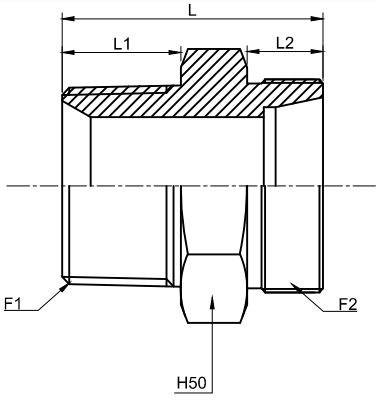

ADAPTEURS MAL BSP CONIQUE /EFG

ADAPTORS BSP MALE TAPRED / FRENCH METRIC MALE 24° CONE GAZ TYPE

Reference	Filetage		Dimensions en (mm)			
Code article	F1	F2	L	L1	L2	H1
AD 0718 -20-4515	1"1/4 11F	45X150	55	25	16	50
AD 0718 -16-3015	1" 11F	30X150	50	22	15	38
AD 0718 -16-4515	1" 11F	45X150	51	22	16	46
AD 0718 -16-2415	1" 11F	24X150	37	16	12	24
AD 0718 -12-2415	3/4"11F	24X150	37	16	12	24
AD 0718 -12-3015	3/4"11F	30X150	44	15	17	32